Vector Platform Lift

The versatile access solution for public and commercial buildings

Internal ▪ External ▪ Light Goods

Introducing the
Vector Platform Lift

With over 550 lifts installed a year, the versatile Vector platform lift is a simple, cost effective and highly customisable lift.

Perfect for demanding environments, the Vector platform lift brings together great design, safety and quality, making it an ideal access solution for almost any environment.

Suitable for internal and external installations, and with the option to commission as a light goods and passenger lift, the Vector offers a huge range of options - whilst ticking all the boxes for Part M and the Equality Act.

Using less energy than a kettle to run, and made of 95% recyclable parts, the Vector is leading the way in sustainable access.

Introducing the
Vector Platform Lift

Short Travel & Half Height Gate

Goods Capable & Higher Rated Load

Internal and External Installation

School Locking and Safety Features

Vector Platform Lift Technical Specification

TECHNICAL DETAILS	
Type of Lift	Platform lift for public and commercial environments
Environment	Internal
Max. Travel	250 - 13,000 mm
No. of Floors	2 - 6
Top Height	2240mm (minimum)
Pit / Ramp	50mm (pit or ramp)
Rated Speed	0.15m/s
Drive System	Screw and Nut System with Emergency Battery Backup
Platform Controls	Hold to Run
Landing Controls	Single Press Operation
Power Req.	1 Phase, 230V, 20A (standard) *3 Phase, 400V, 20A (500kg)
Doors	Full height door as standard Half Height Gate available (under 3,000mm travel only)
Door Configuration	Doors on any 2 of 3 sides on each landing
Compliance	EN81-41 Machinery Directive Compliant Part M Compliant

BREEAM & Platform Lifts

A platform lift waivers 2 points from your overall BREEAM requirement, allowing a better overall sustainability rating for the building.

MEASUREMENTS				
Platform Size	Shaft Size	Structural Opening	Rated Load	Equality Act Compliance
900 x 1040mm	1275 x 1160mm	1305 x 1190mm	250 kg	N/A
900 x 1280mm	1275 x 1400mm	1305 x 1430mm	410 kg	N/A
900 x 1480mm	1275 x 1600mm	1305 x 1630mm	410 / 500* kg	Through Car or Single Entry
1000 x 1280mm	1375 x 1400mm	1405 x 1430mm	410 kg	N/A
1000 x 1480mm	1375 x 1600mm	1405 x 1630mm	410 / 500* kg	Through Car or Single Entry
1000 x 1980mm	1375 x 2100mm	1405 x 2130mm	500* kg	Through Car or Single Entry
1100 x 1480mm	1475 x 1600mm	1505 x 1630mm	410 / 500* kg	All Configurations
1100 x 1580mm	1475 x 1700mm	1505 x 1730mm	500* kg	All Configurations

**All 500kg models require 3 phase, 400V, 20A supply*

Doors B Side: Add 25mm to structural opening width

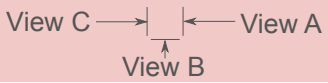

Vector Platform Lift Plan Views

900 x 1040mm

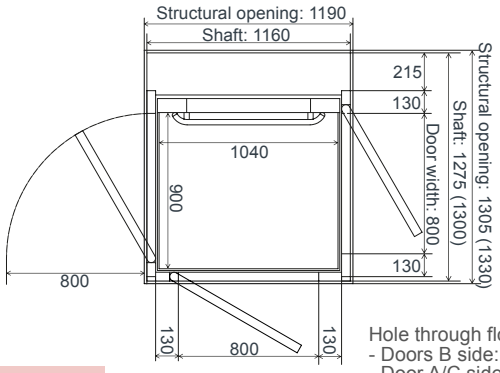

Non-Compliant Size
Will need building control dispensation

Hole through floor:
- Doors B side: 1330 x 1190mm
- Door A/C side: 1305 x 1190mm
Platform: 900 x 1040mm
Load: 250kg / 3 person

900 x 1280mm

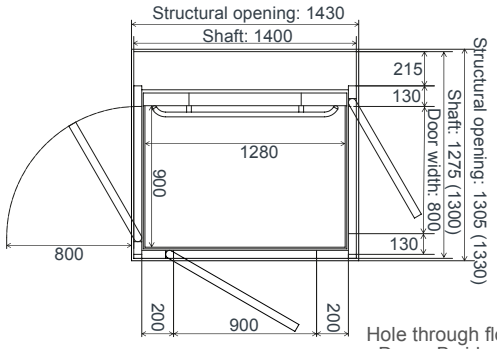

Non-Compliant Size
Will need building control dispensation

Hole through floor:
- Doors B side: 1330 x 1430mm
- Door A/C side: 1305 x 1430mm
Platform: 900 x 1280mm
Load: 410kg / 3 person

900 x 1480mm

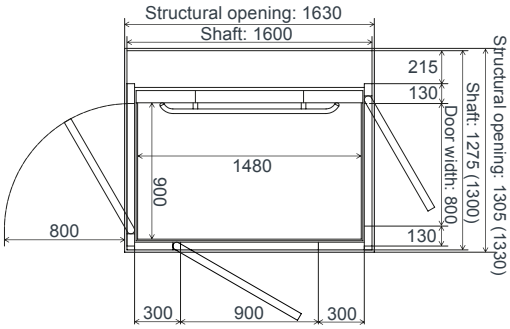

Hole through floor:
- Doors B side: 1330 x 1630mm
- Door A/C side: 1305 x 1630mm
Platform: 900 x 1480mm
Load: 410 / 500kg
Persons: 5 / Wheelchair

1000 x 1280mm

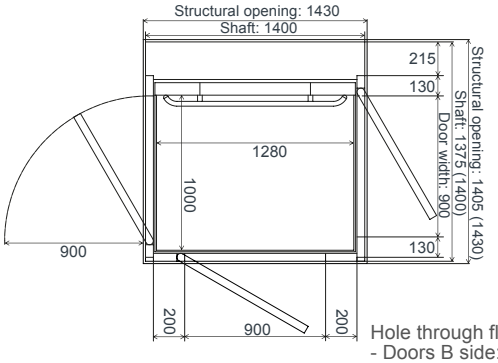

Non-Compliant Size
Will need building control dispensation

Hole through floor:
- Doors B side: 1430 x 1430mm
- Door A/C side: 1405 x 1430mm
Platform: 1000 x 1280mm
Load: 410kg / 3 person

1000 x 1480mm

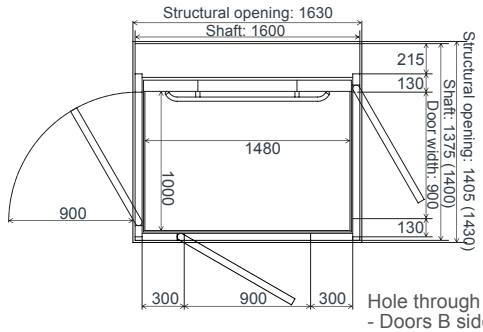

Hole through floor:
- Doors B side: 1430 x 1630mm
- Door A/C side: 1405 x 1630mm
Platform: 1000 x 1480mm
Load: 410 / 500kg
Persons: 5 / Wheelchair

1000 x 1980mm

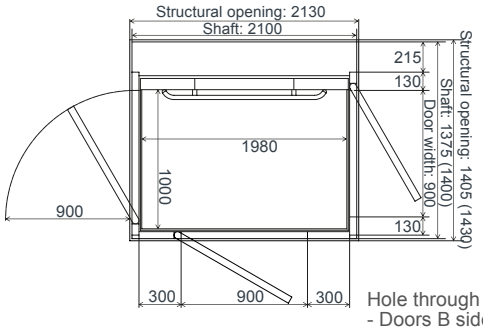

3 phase power only

Hole through floor:
- Doors B side: 1430 x 2130mm
- Door A/C side: 1405 x 2130mm
Platform: 1000 x 1980mm
Load: 500kg
Persons: 6 / Wheelchair

1100 x 1480mm

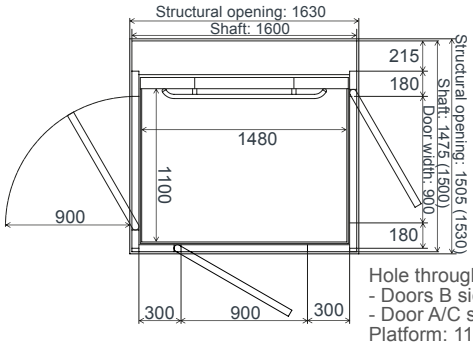

Hole through floor:
- Doors B side: 1530 x 1630mm
- Door A/C side: 1505 x 1630mm
Platform: 1100 x 1480mm
Load: 410 / 500kg
Persons: 5 / Wheelchair & Attendant

1100 x 1580mm

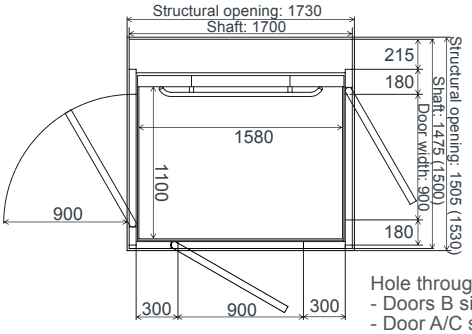

3 phase power only

Hole through floor:
- Doors B side: 1530 x 1730mm
- Door A/C side: 1505 x 1730mm
Platform: 1100 x 1580mm
Load: 500kg
Persons: 6 / Wheelchair & Attendant

7000 Flexi Platform Lift Technical Specification

TECHNICAL DETAILS	
Type of Lift	Platform lift for public and commercial environments
Environment	Internal, light goods
Max. Travel	250 - 13,000 mm
No. of Floors	2 - 6
Top Height	2240mm (minimum)
Pit / Ramp	50mm (pit or ramp)
Rated Speed	0.15m/s
Drive System	Screw and Nut System with Emergency Battery Backup
Platform Controls	Hold to Run
Landing Controls	Single Press Operation
Power Req.	1 Phase, 230V, 20A (standard) *3 Phase, 400V, 20A (500kg)
Doors	Full height door as standard Half Height Gate available (under 3,000mm travel only)
Door Configuration	Doors on any 2 of 3 sides on each landing
Compliance	EN81-41 Machinery Directive Compliant Part M Compliant

900 x 1480mm

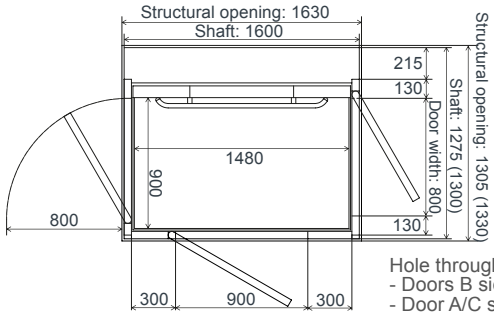

Hole through floor:
- Doors B side: 1330 x 1630mm
- Door A/C side: 1305 x 1630mm
Platform: 900 x 1480mm
Load: 410 \ 500kg

1000 x 1480mm

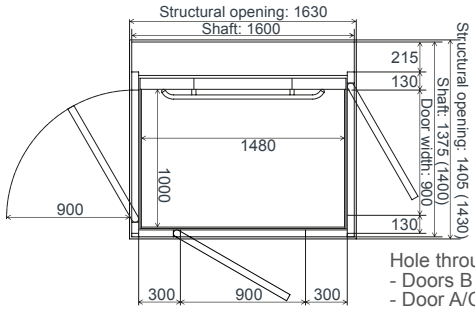

Hole through floor:
- Doors B side: 1430 x 1630mm
- Door A/C side: 1405 x 1630mm
Platform: 1000 x 1480mm
Load: 410 \ 500kg

1000 x 1980mm

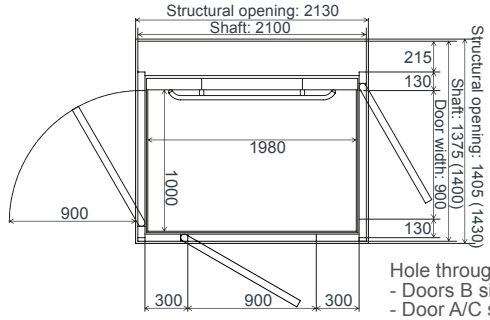

Hole through floor:
- Doors B side: 1430 x 2130mm
- Door A/C side: 1405 x 2130mm
Platform: 1000 x 1980mm
Load: 500kg

1100 x 1480mm

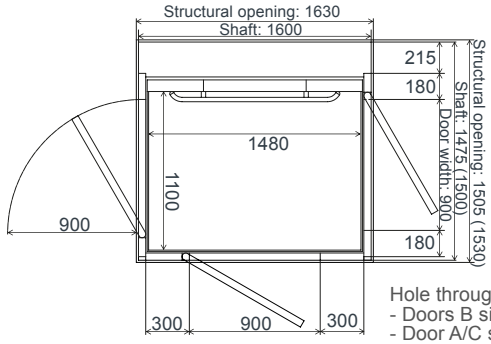

Hole through floor:
- Doors B side: 1530 x 1630mm
- Door A/C side: 1505 x 1630mm
Platform: 1100 x 1480mm
Load: 410 \ 500kg

1100 x 1580mm

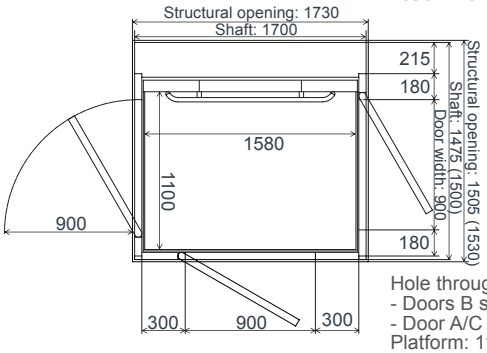

Hole through floor:
- Doors B side: 1530 x 1730mm
- Door A/C side: 1505 x 1730mm
Platform: 1100 x 1580mm
Load: 500kg

Light Goods and Passengers

The flexi has an optional kerb which reduces shaft damage from trolleys and light goods.

7000 Flexi Lift

7000XT Platform Lift Technical Specification

TECHNICAL DETAILS	
Type of Lift	Platform lift for public and commercial environments
Environment	External Temp. min. -5° - max. +40° Windloads up to 10m/s*
Max. Travel	250 - 10,000 mm 3,500mm freestanding and dependent on wind loads
No. of Floors	2 - 6
Top Height	2240mm (minimum)
Pit / Ramp	50mm (pit with drain or ramp)
Rated Speed	0.15m/s
Drive System	Screw and Nut System with Emergency Battery Backup
Platform Controls	Hold to Run
Landing Controls	Single Press Operation
Power Req.	1 Phase, 230V, 20A (standard) *3 Phase, 400V, 20A (500kg)
Doors	Full height door only
Door Configuration	Doors on any 2 of 3 sides on each landing
Compliance	EN81-41 Machinery Directive Compliant Part M Compliant
Additional Features	7000XT (External) - Overhead Door Canopy - Guttering / Drainage - Ventilation / Shaft Heating

**Where wind loads exceed 10m/s, a windshield or external building around the shaft is required.*

External Lift Features

The 7000XT has optional features ideal for outdoor use, such as a canopy and shaft heater (pg 11).

External 7000XT Lift

1100 x 1480mm

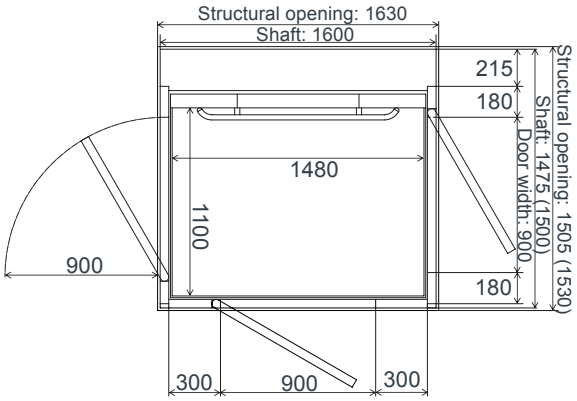

Hole through floor:
- Doors B side: 1530 x 1630mm
- Door A/C side: 1505 x 1630mm

Platform: 1100 x 1480mm
Load: 410 \ 500kg

7000 Series Platform Lift Features and Options

STANDARD FEATURES

GL Door

Glass & steel door with concealed closer and aluminium trim to glass areas.

Aluminium Platform Handrail & Door Handle

Closed end rod style handrail and handle with finger print resistant finish.

Tactile Buttons

Finished in gloss black, matte black or metal effect.

Alarm Button

Fitted as standard, when pressed a buzzer sounds.

Half Height Console

Half height panel with controls, handrail and safety stop edge.

Total height: 1100mm

Landing Call Station

Standard call button placed on door frame.

Available in Aluminium or Stainless Steel finish.

Grey Mineral Vinyl Flooring

Flourescent Shaft Lighting

OPTIONAL FEATURES

Doors

Fire Door (60 Minutes) — 7000 ✓ | Flexi ✓ | XT ✓

Includes concealed door closer and aluminium trim to glass areas.

Note: to make the shaft fire resistant, cladding must be applied to the outside of the shaft by the client.

Half Height Gate (Top Floor) — 7000 ✓ | Flexi ✓

Includes concealed door closer and aluminium trims to glass areas.

Maximum travel height 2m.

Automatic Door Opener — 7000 ✓ | Flexi ✓ | XT ✓

Press the landing call station button and the lift doors open.

Replaces standard concealed door closer.

Entry

Ramped Entry — 7000 ✓ | Flexi ✓ | XT ✓

Choose from a 50mm pit, or 50mm galvanised steel ramp at the lowest floor level where a pit is not possible.

Lighting

Shaft Lighting — 7000 ✓ | Flexi ✓ | XT ✓

LED spot lights in ceiling of shaft.

Note: full height console option has integrated lighting.

Walls & Shaft

Glazing Tints (Doors & Shaft) — 7000 ✓ | Flexi ✓ | XT ✓

For doors and shaft, choose:

- Clear Glass (JT10)
- Tinted Glass (JT16)
- Frosted Glass (JT23)
- Dark Tinted Glass (JT5)

Shaft panels are available in 3 heights, or custom to 2500mm.

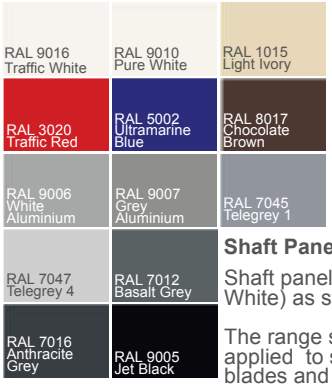

Shaft Panel Colours — 7000 ✓ | Flexi ✓ | XT ✓

Shaft panels in 9016 (Traffic White) as standard.

The range shown here can be applied to shaft panels, door blades and door frames.

Opening

Key Locking — 7000 ✓ | Flexi ✓ | XT ✓

A key can be used instead of a button to restrict access.

You will need the key to call the lift. The doors lock 10 seconds after closing.

Remote Call Station — 7000 ✓ | Flexi ✓ | XT ✓

Mounted away from the lift, either flush or protruding.

Allows the user to call the lift whilst away from the doors.

7000 Series Platform Lift Features and Options

OPTIONAL FEATURES

		7000	Flexi	XT
Platform	**Full Height Console & Mirror** Full height panel houses all controls, mirror, integral top edge lighting, handrail and safety stop edge. Total height: 2000mm	✓	✓	✓
Destination	**Gloss Platform Buttons** Finished in gloss black. Positioned on the platform control panel.	✓	✓	✓
	Platform Floor Indicator A voice and LED display to notify the user of the landing reached and current position during travel. Required for over 2 stops. Positioned on the control panel on the platform.	✓	✓	✓
	Landing Position Indicator Illuminated LED display shows the current position of the lift from the outside. Positioned on exterior of the lift.	✓	✓	✓
	Bespoke Floor Lettering Bespoke lettering can be displayed above buttons on the platform control panel. Max. 10 letters per stop.	✓	✓	✓
Communication	**Telephone** Attached to the platform, this can be used like a normal telephone. Intended for emergencies only.	✓	✓	✓
	Autodialler (Faltcom) Integrated in the control panel, the autodialler rings a set of pre-entered numbers when the alarm button is pressed. When unanswered, the next number is called.	✓	✓	✓

		7000	Flexi	XT
Rails and Handles	**Platform Handrail Brushed Stainless Steel** Closed end rod style handrail with brushed stainless steel fingerprint resistant finish.	✓	✓	✓
	Door Handle Brushed Stainless Steel Closed end rod style handle with brushed stainless steel fingerprint resistant finish.	✓	✓	✓
Flooring	**Platform Flooring** Choose from 8 flooring options, or select your own.	✓	✓	✓

European Oak Vinyl
Classic Beech Vinyl
Checker Stud Blue Rubber
Checker Stud Black Rubber
Beige Mineral Vinyl
Aluminium
Blue Mineral Vinyl
Sand Mineral Vinyl

7000 Flexi Platform Lift Features and Options

OPTIONAL FEATURES

Platform

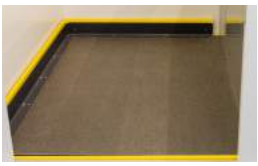

Raised Platform Kerb

Around the edge of the platform, a 90cm high curb prevents damage to shaft walls from impact during loading, or from scratching during travel.

Higher Rated Load

Particularly useful for light goods use, the rated load can be increased to 500kg. Models at 500kg require a 3ph power supply.

This must be selected during ordering as load testing is completed during commissioning.

7000XT Platform Lift Features and Options

STANDARD FEATURES

Ventilation System

A ventilation fan is installed in the top of the shaft, including upper panels with fan holes, and lower panels with ventilation holes.

Weather-proof Enhancements

Corrosion-resistant guides, screw and covers, along with water resistant call button protection, door brush strip and outdoor-suitable oil are used for all external installations.

OPTIONAL FEATURES

Platform

Heating System

A 2000W heater placed at the bottom of the shaft prevents freezing during winter.

External power socket required.

Higher Rated Load

The rated load can be increased to 500kg. Models at 500kg require a 3ph power supply.

This must be selected during ordering as load testing is completed during commissioning.

Exterior

Exterior Door Canopy

A sloping roof placed above landing doors to protect doors and users from poor weather. Made of galvanised steel and painted in RAL9016 (Traffic White) as standard.

Width: 1160mm
Slope Angle: 23 degrees

Exterior Roof

If the top floor of the lift is externally located and is not installed within a pre-built shaft then an exterior roof is required. Made of galvanised steel and painted in RAL9016 (Traffic White) as standard.

An inner ceiling with light must be ordered with the exterior roof.

One of the most popular commercial platform lifts in the UK, the 7000 is a hugely versatile, fully customisable lift which allows for use as a general access lift, external lift or light goods lift.

The 7000 is designed and manufactured in Sweden, and thanks to the modular system, the lift is installed in just a few days.

Ideal for education, healthcare, offices, industrial units, faith and listed buildings, retail, and almost every sector and commercial building type, the 7000 is a simple, low cost and effective tool for almost all access needs.